THE ULTRA BOND®
LONG CRACK PATENTS

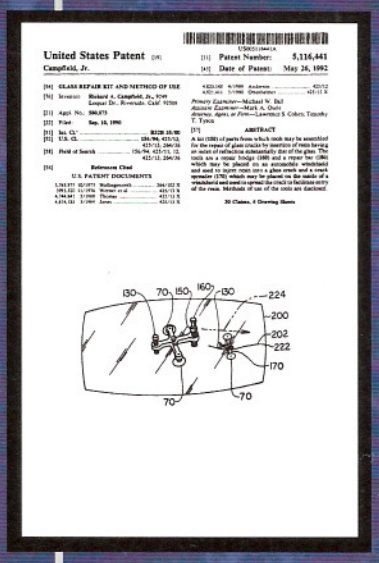

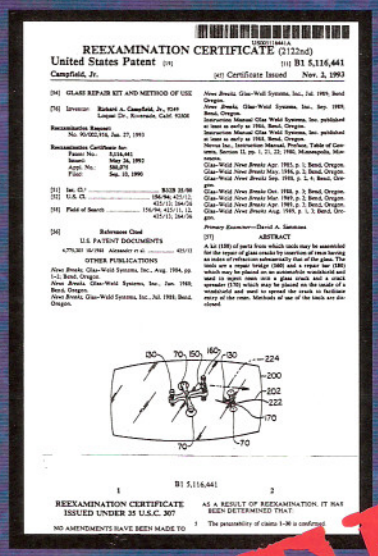

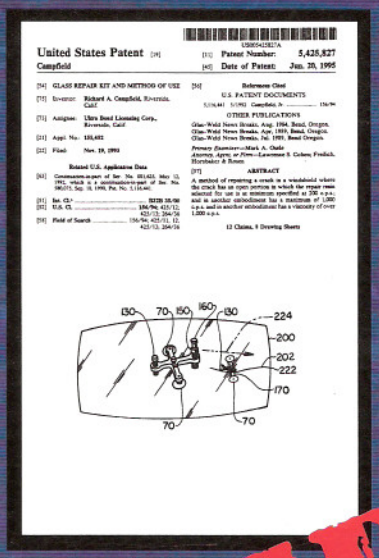

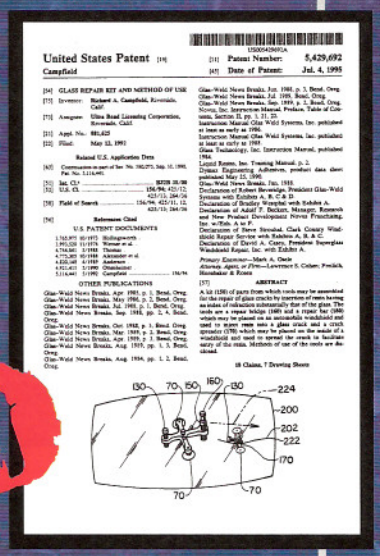

PATENTED

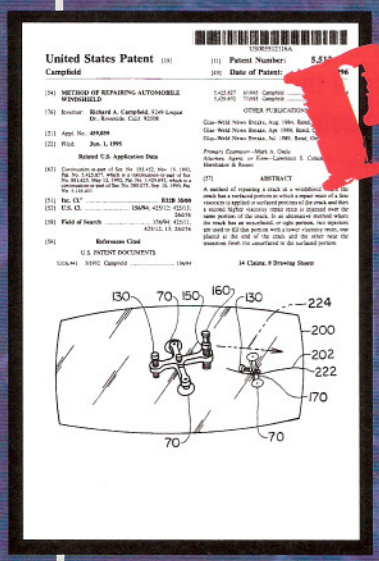

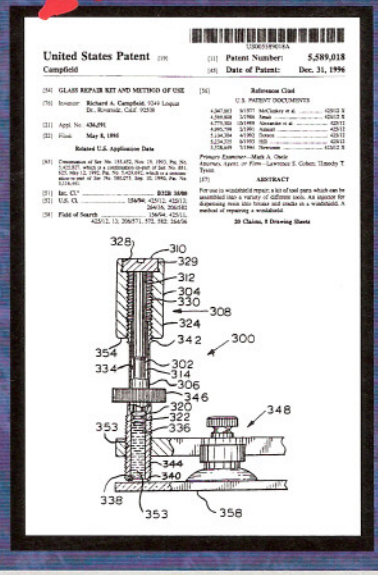

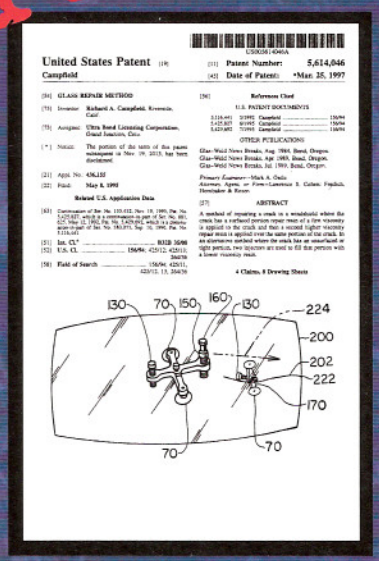

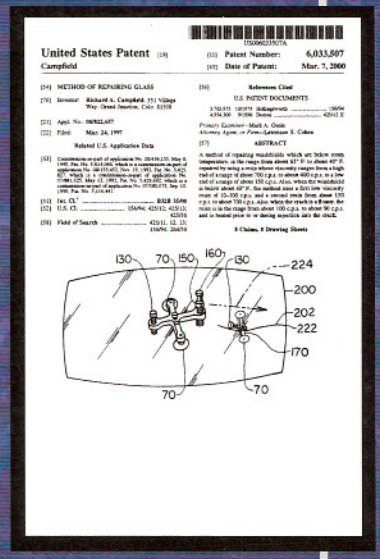

Ultra BOND Licensing Corporation — 800-398-BOND